HARDWARE SOLUTIONS S.R.L.
Via Ghiarola Vecchia 32
Fiorano Modenese, 41042 (MO)
info@hardwaresolutions.it
sales@hardwaresolutions.it
www.hardwaresolutions.it

Features

- 17” New Generation Stainless Steel Panel PC
- 12th/13th Gen. Intel Core i3/i5 BGA Type Processor
- True Flat Front Bezel Design and Grade 304 Stainless Steel Enclosure (Grade 316 for Option)
- IP66/IP69K Rated with M12 Connectors
- Support Resistive Touch, Projected Capacitive Touch
- Touch on/off Button on the Side Edge for Hygienic Cleaning
- Support Ergonomic Versatile Mounting: Yoke Mounting / Space-saving VESA 75 x 75mm Mounting

Specifications

System	
CPU	Intel Core i3-1215U Processor, 6C8T, 10M Cache, 1.2GHz (4.4GHz) Intel Core i5-1235U Processor, 10C12T, 10M Cache, 1.3GHz (4.4GHz)
System Chipset	SoC
Memory	2 x 260-pin SO-DIMM up to 64GB DDR4 3200MHz
TPM	TPM 2.0

IO Port	
USB	1 x M12 8-pin for USB 2.0 with waterproof cover
Serial / Parallel	1 x M12 8-pin COM1, RS-232/422/485, default RS-232, with waterproof cover
LAN	1 x M12 8-pin for LAN with waterproof cover
Others	1 x Touch on/off button at the side
Power Connector	1 x M12 3-pin for DC power with waterproof cover 1 x Power switch on the rear
Option	2 x optional blank M12 connector with waterproof cover for selecting two from the following options: 2 x USB 2.0 1 x USB 3.0 1 x LAN 1 x COM

Storage Space	
M.2	1 x M.2 2280 M-Key (PCIex4)

Expansion	
Expansion slot	1 x M.2 3402/3052 B-key (PCIe x1, USB3.2 Gen1) for optional LTE/5G module 1 x M.2 2230 E-Key (USB2.0, PCIe x1) for optional Wi-Fi/BT module 1 x Nano-SIM card
RFID module	RFID module design on the front side (for option)

Display	Standard	High Brightness Optional
Display Type	17" TFT-LCD	17" TFT-LCD
Max. Resolution	1280 x 1024	1280 x 1024
Max. Color	16.7M	16.7M
Luminance (cd/m^2)	350	1000
View Angle	170(H) /160(V)	160(H) /140(V)
Contrast	1000:1	800:1
Backlight Lifetime	30,000 hrs	50,000 hrs

Touch Screen	
Type	Resistive Touch (for DR model) Projected Capacitive Touch (for DP model)
Interface	USB
Light Transmission(%)	Resistive Touch : 80% Projected Capacitive Touch : 90%

Dimensions

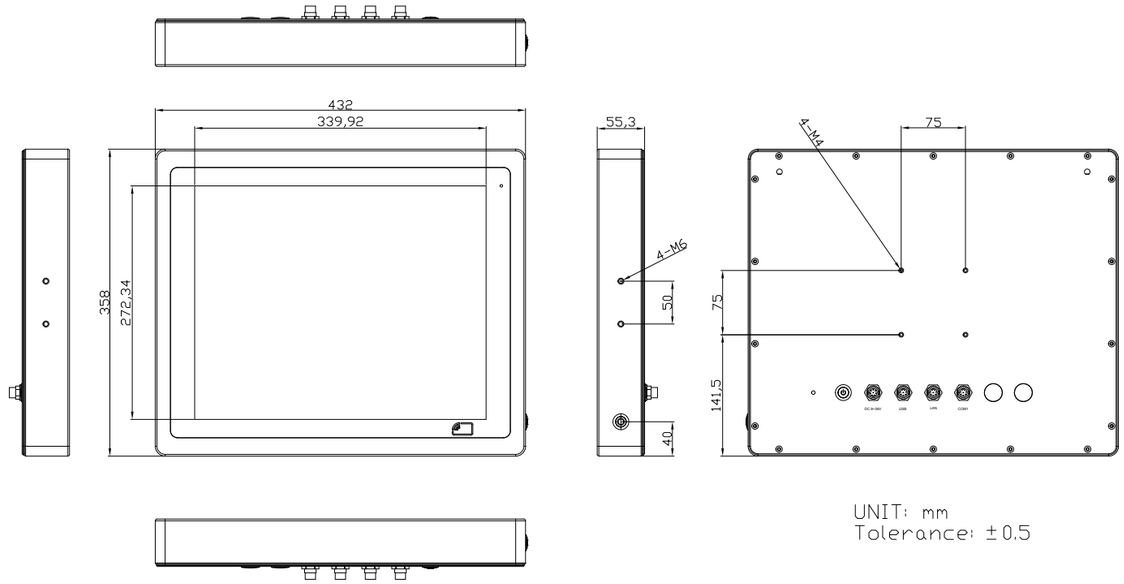

Power	
Power Input	DC 9~36V
Power Consumption	63.29W

Mechanical	
Construction	304 Stainless steel chassis(default), 316 Stainless steel chassis(optional)
Mounting	VESA mount 75 x 75, Yoke mount for optional
IP Rating	Total IP66/IP69K
Dimensions	432 x 358 x 55.3 mm
Net Weight	7.9 kg

Environmental	
Operating Temperature	0~50°C / -20~60°C for option
Storage Temperature	-30~70°C
Humidity	10 to 95% @ 40°C, non-condensing
Certificate	CE/FCC Class A

Operating System Support
Windows 10, Windows 11

Accessary
1 x M12 USB2.0 Y-Cable, L=3M

Ordering Information	
ViTAM-917DP	17" SXGA IP66/IP69K stainless steel panel pc, Intel 12th/13th Gen. Core i Processor, 2 x SO-DIMM DDR4 slots, 128GB TLC SSD, projected capacitive touch, 9~36V DC power input with Adapter
ViTAM-917DR	17" SXGA IP66/IP69K stainless steel panel pc, Intel 12th/13th Gen. Core i Processor, 2 x SO-DIMM DDR4 slots, 128GB TLC SSD, 5 wire resistive touch window, 9~36V DC power input with Adapter
ViTAM-917DPH	17" SXGA 1000nits IP66/IP69K stainless steel panel pc, Intel 12th/13th Gen. Core i Processor, 2 x SO-DIMM DDR4 slots, 128GB TLC SSD, projected capacitive touch, 9~36V DC power input with Adapter
ViTAM-917DRH	17" SXGA 1000nits IP66/IP69K stainless steel panel pc, Intel 12th/13th Gen. Core i Processor, 2 x SO-DIMM DDR4 slots, 128GB TLC SSD, 5 wire resistive touch window, 9~36V DC power input with Adapter

V 1.0

All specifications and photos are subject to change without notice.
Industrial Panel PC